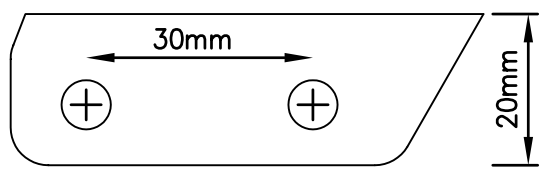

Ⓐ INNER PLASTIC SLIDER PIECE

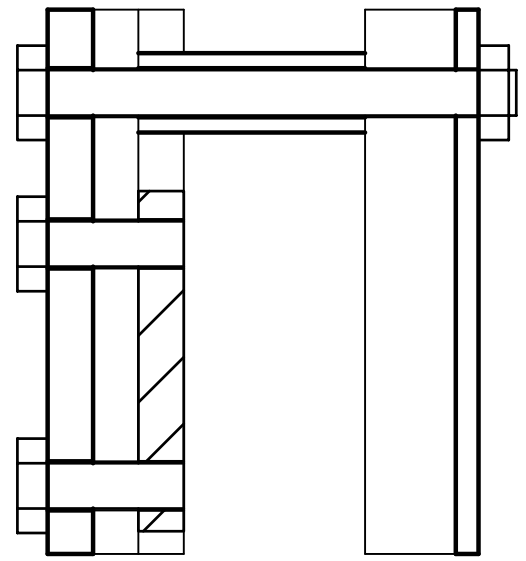

TOP VIEW (SECTION)

Construction Notes:
- build 2 side plates, mirrored
- shape alum plates while bolted together
- shape UHMW while bolted together
- spacer tube goes on leading thru bolt

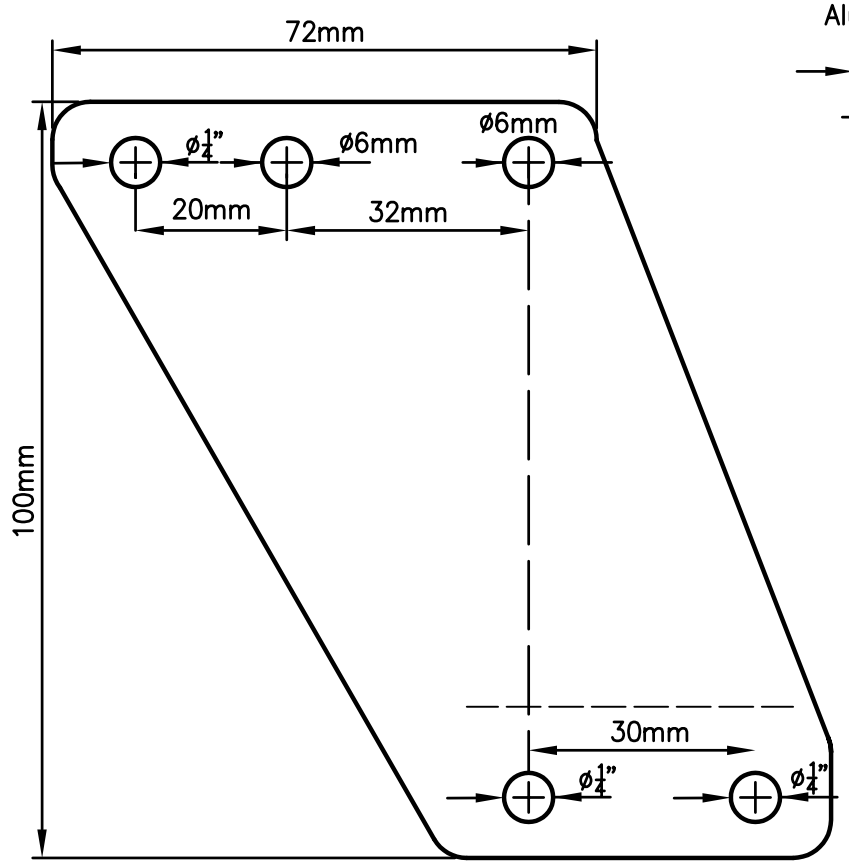

LEFT SIDE

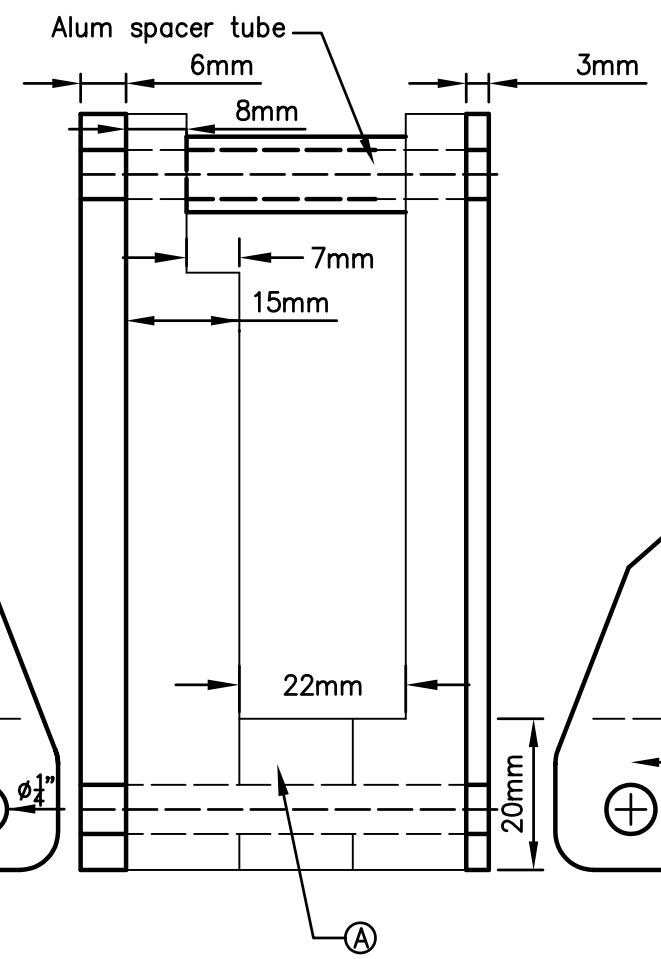

REAR VIEW

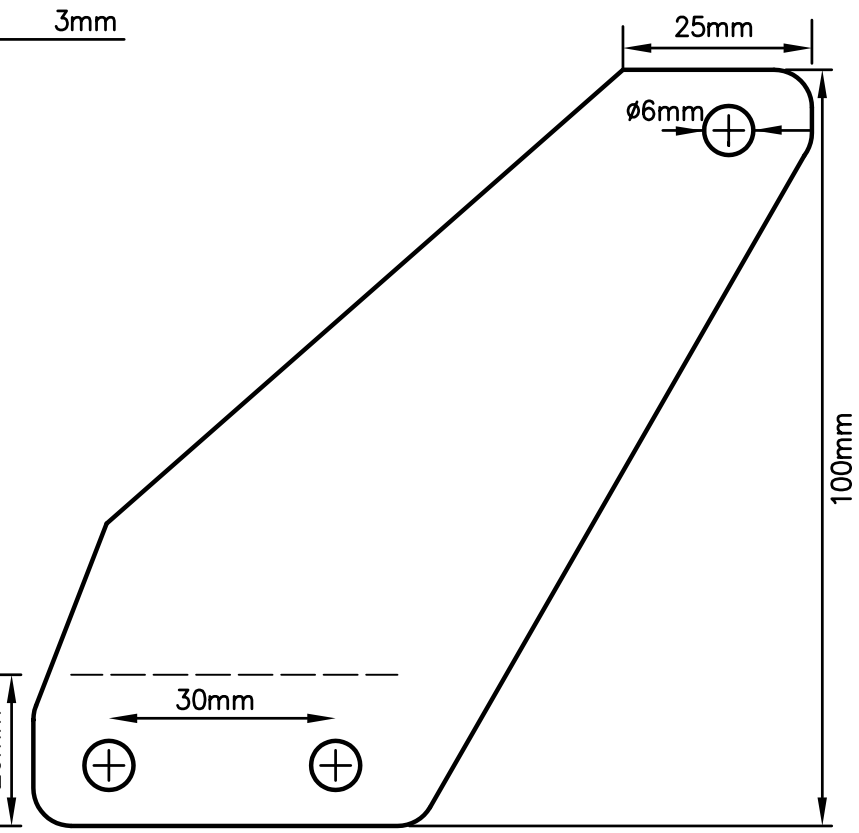

RIGHT SIDE

CKC

TITLE
'03 XR100 Chain Guide

SCALE: 1:1	DRAWN BY: CKC	DATE: NOV29/04
DRAWING NUMBER: XR_CG	REV: 03	SHEET OF